Crackle Box DIY Kit v1.1 Rev:

2024-11-01 23:44...

	Sourced	Placed	References	Value	Quantity
1	☐	☐	C3, C5	10nF	2
2	☐	☐	C1	100nF	1
3	☐	☐	C2	100uF	1
4	☐	☐	C4	2.2nF	1
5	☐	☐	R2, R4, R6, R7	10K	4
6	☐	☐	R1	1K	1
7	☐	☐	R3	10M	1
8	☐	☐	R5	100R	1
9	☐	☐	D1	1N5817	1
10	☐	☐	D2	LED - Blue	1
11	☐	☐	D3	LED - Red	1
12	☐	☐	U1	LM709	1
13	☐	☐	Q2, Q4, Q5, Q6	BC547	4
15	☐	☐	Q1, Q3	BC557	2
16	☐	☐	LS1	Speaker	1
17	☐	☐	RV1	Volume	1
18	☐	☐	S1	TL2230EEF140	1
19	☐	☐	T1	Transformer_1P_1S	1
20	☐	☐	J1	Conn_01x06_Female	1
21	☐	☐	J2	Out	1
22	☐	☐	J3	DC Jack	1

Negative Pins Square for Leds

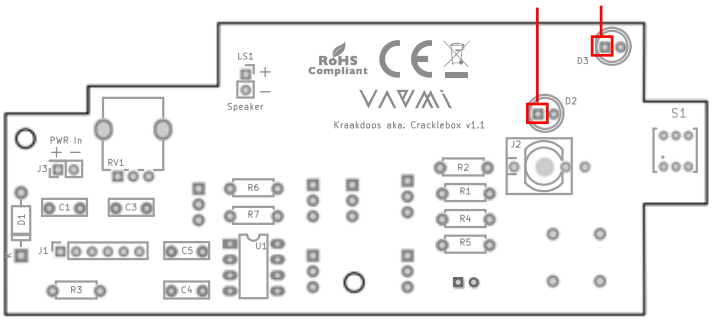
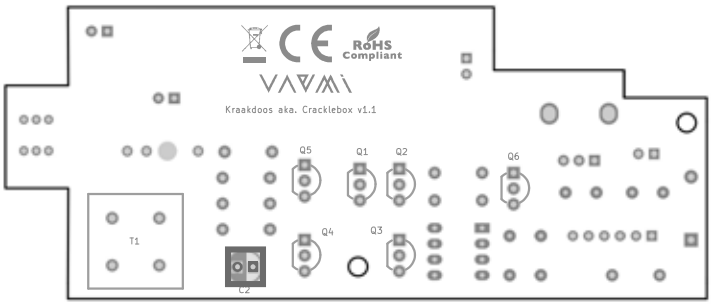
1 x blue cap for switch
4x m3 screw
1x knob
1x speaker cable
4x speaker screw and nut
1x DC Cable Twin
1x SMD header male 1x6
2x standoff
1x 9v Battery plug